M54-40-S250-R

close

Dimension

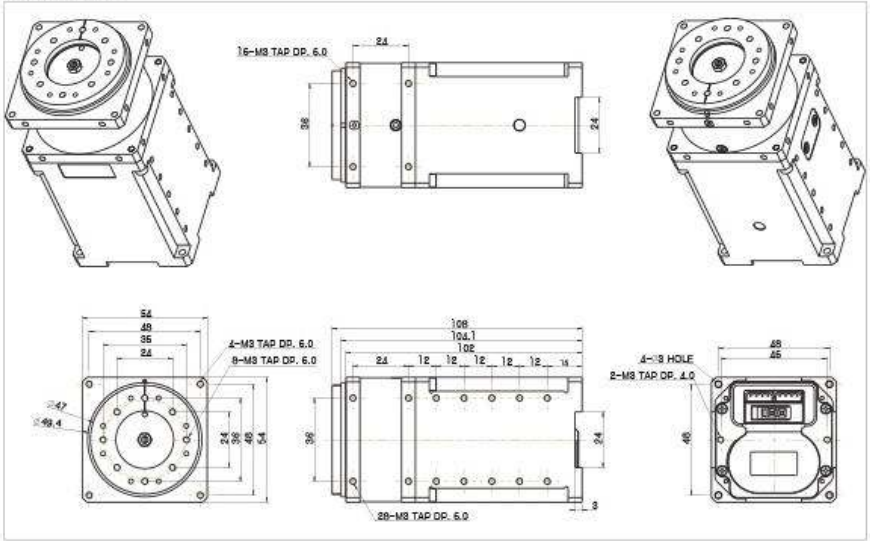

Download

Data

		Unit	Data
Rated voltage		V	24
No load speed		RPM	28.4
No load current		A	1.32
Continuous operation	Speed	RPM	23.8
	Torque	N.m	6.7
	Current	A	2.2
Resolution		Step/turn	251400
Gear ratio		-	251
Backlash		arcmin	3.8
Interface		-	RS-485 / CAN(Optional)
Operating temperature		℃	5~55
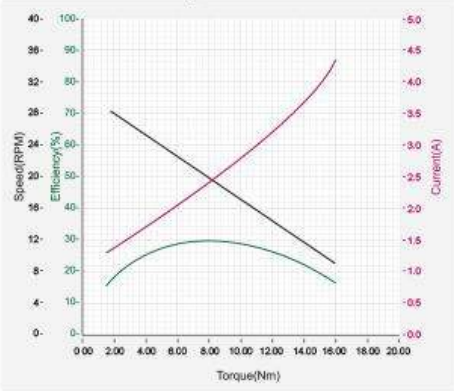
Performance Graph